eLEARN

GESTIONE ELETTRONICA MOTORI BENZINA

191 - Giulietta

ELECTRONIC MANAGEMENT OF PETROL ENGINES - DESCRIPTION

This engine features petrol direct injection and supercharging through a turbocharger and dual continuous variable valve timing system on intake and exhaust, to ensure high power, flexible driving and brilliant performance.

Direct injection ensures reduced consumption vs. the power unit performance. The turbo achieves quick take off, thanks to a particularly favourable torque curve.

The double variable valve timing achieves an internal gas recirculation, satisfying EURO 5 emission limits.

An electronic control system supervises and manages all engine parameters to optimize performance and fuel consumption by means of a real-time response to different operating conditions.

Depending on the signals received from numerous sensors, the control unit manages the injectors connected to it, handling the following systems:

- fuel supply;

- high pressure fuel pump control;

- air supply and turbocharging;

- accelerator pedal

- engine cooling;

- exhaust with catalytic converters controlled by four Lambda sensors;

- fuel vapour recirculation.

The control unit of this JTS engine manages the operation of the high pressure fuel pump by controlling an electric pressure regulator and an associated pressure sensor.

The throttle body is also controlled electronically by the control unit: the throttle opening is calculated according to a specific logic inside the engine management control unit; the mechanical connection between the accelerator pedal and the throttle body is thereby eliminated.

The control unit controls the engine timing by means of a pair of electrohydraulic variable valve timing systems - one on the inlet shaft and one on the exhaust shaft; this solution makes it possible to ensure optimum timing by managing the inlet and the exhaust separately; two timing sensors allow the continuous control of the solution set.

Thanks to the electronic management described above, this engine conforms to the most recent emission control regulations (EURO 5).

For more details

See descriptions 1056 PETROL INJECTION SYSTEM

The system is also controlled by dedicated relays in the engine compartment junction unit.Lines supplying the control unit and various system components (sensors and actuators) are protected by dedicated fuses that are also located in the junction unit.

ELECTRONIC MANAGEMENT OF PETROL ENGINES - OPERATIONAL DESCRIPTION

Engine management control unit M010 controls and governs the entire electronic ignition and injection system.

The ignition-operated power supply (15/54) comes from the line protected by fuse F16 of the engine compartment control unit B001 at pin 87 of connector A of M010.

Pins 1, 2 and 4 of connector A of M010 are earthed.

The main injection relay switch T09 of B001 controls the entire system: it is energised by a control (earth) signal from pin 69 of connector A of control unit M010 and then forwards a power supply:

- to pins 3, 5 and 6 of connector A of the actual control unit, via the line protected by fuse F22 of B1;

- to the air flow meter K041, to the wastegate solenoid valves L037, to fuel vapour recovery solenoid valve L010 and to turbocharger bypass solenoid valve L102, to the variable valve timing systems N092 and N093 and to the oxygen sensors K015 and K017 (all these lines are protected by fuse F11 of B001;

- to the coils A30, through the line protected by fuse F17 of B001.

The fuel pump relay T10 of B001 is supplied by the line protected by fuse F21 of B001.

It is energised by a (positive) control signal from pin 93 of connector A of the control unit M010 and supplies power to fuel pump N040.

The engine management control unit M010 receives signals from the various sensors, thereby keeping all the engine operating parameters under control.

The rpm sensor K046 provides engine rpm information through a frequency signal sent to pins 28 and 43 of connector B of the control unit M010.

The intake side timing sensor K106 receives a power supply from pin 27 of connector B of control unit M010 and a reference earth from pin 8 of connector B; it sends a frequency signal corresponding to the timing to pin 53 of connector B of the actual control unit.

The exhaust side timing sensor K107 receives a power supply from pin 27 of connector B of control unit M010 and a reference earth from pin 8 of connector B and sends a frequency signal corresponding to the timing to pin 54 of connector B of the actual control unit.

The fuel pressure sensor K083 receives power supply from pin 13 of connector B of the control unit M010 and a reference earth from pin 29 of connector B; it sends a frequency signal corresponding to the fuel pressure to pin 40 of connector B of the control unit.

Air pressure and temperature sensor K044 receives power supply from pin 13 of connector B of control unit M010, receives a reference earth from pin 29 of connector B and sends a frequency signal corresponding to the supercharging pressure to pin 39 of connector B of the control unit; instead, to pin 38 of connector B of M010 it sends a temperature signal.

The absolute pressure sensor K082 receives power supply from pin 13 of connector B of the control unit M010 and a reference earth from pin 29 of connector B and sends a frequency signal corresponding to the absolute pressure to pin 55 of connector B of the control unit.

The engine temperature sender unit K036 receives a reference earth from pin 14 of connector B of the control unit M010 and sends a signal proportional to engine coolant temperature to pin 57 of connector B of the control unit.

The oxygen sensors K015 and K017 provide the control unit M010 with information about the correct composition of fuel/air mixture in different exhaust positions: the first one - a linear one - is upstream the pre-catalytic converter, the second - flat type - is downstream the same.

The linear sensor K015 sends signals to pins 76, 77, 78 and 79 of connector A of M010, whilst it is heated by a heating coil to ensure correct operation even when cold. The coil is supplied by the fuse F11 of B001 and receives an earth signal from pin 73 of connector A of control unit M010.

The flat sensor K017 sends signals to pins 34 and 62 of connector A of M010 whilst it is heated by a heating coil supplied by fuse F11 of B001, and receives an earth signal from pin 29 of connector A of control unit M010.

The knock sensor K050 makes it possible to have information about detonation conditions by means of a frequency signal sent to pin 25 of connector B of control unit M010: it receives a reference earth from pin 10 of connector B.

The knock sensor K051 makes it possible to have information about detonation conditions by means of a frequency signal sent to pin 26 of connector B of control unit M010: it receives a reference earth from pin 11 of connector B.

The air flow meter K041 (supplied by fuse F11 of B001) is connected to pins 17, 18 and 40 of connector B of the control unit M010.

Accelerator pedal K055 contains two built-in potentiometers (a main one and a safety one). The former receives power and earth signals from pins 82 and 35 of connector A of M010 and sends a corresponding signal to pin 83 of the same connector. The latter receives power and earth signals from pins 11 and 81 of connector A of M010 and sends a corresponding signal to pin 61 of the same connector.

The control unit M010 receives - at pin 9 of connector B - a signal for the minimum engine oil pressure sensor K030.

The pin 19 of connector A of M010 receives the signal coming from the brake light switch I30 - N.A. contact - with an "ignition-controlled" supply (INT) from fuse F37 of control unit B2; it receives the signal - N.C. contact - coming from the brake light switch I30 at pin 24 of connector A of M010 with an "ignition-controlled" supply (INT) from fuse F35 of junction unit B2.

The control unit M010 controls the opening of the single injectors N070, through dedicated signals sent from pins 31 and 33 (cyl. 1), 47 and 49 (cyl. 2), 46 and 34 (cyl. 3), 32 and 48 (cyl. 4) of connector B of M010.

The fuel pressure regulator N077 is operated by the control unit M010 from pins 3 and 4 of connector B.

The control unit M010 also controls the coils A030 (supplied by fuse F17 of B001) by means of control (earth) signals for the primary coil windings, whilst the secondary winding sends the impulse to the spark plugs: from pins 16, 2, 17 and 1 of connector B of M010 for cylinders 1, 2, 3 and 4 respectively

Throttle body actuator N075 has two built-in potentiometers connected in parallel: this controls the throttle opening by means of a step motor.

The motor receives power supply from pins 19 and 20 of connector B of M010. The pin 44 of connector B sends the power supply to the two potentiometers, pin 12 provides the earth signal for them, whilst pins 41 and 24 of the same connector receive signals from throttle body actuator N075.

Fuel vapour recovery solenoid L010 allows fuel vapours to flow through toward the engine intake, where they join the mixture that is entering the combustion chamber. The valve L10 (supplied by fuse F11 of B001) is opened by the control unit when the engine is under load by means of a duty cycle signal from pin 35 of connector B of M010.

The turbo pressure solenoid valve regulates the turbocharger's mechanical wastegate valve; the solenoid valve L037 is supplied by the fuse F11 of B001 and is controlled by the control unit through a signal from pin 16 of connector A of M010.

The by-pass solenoid valve of the turbocharger L102 enables excessive pressure to be discharged during over-run to prevent excessive pressure rises (hammer) that could damage

the intake pipes and impair turbine operation.

It is supplied by the fuse F11 of B001 and is controlled by the control unit through a signal from pin 8 of connector A of M010.

The intake side variable timing system N092 mechanically controls intake timing advance; it is powered by fuse F11 of B001 and is controlled by pin 50 of the connector B of the control unit.

The exhaust side variable timing system N093 mechanically controls intake timing advance; it is powered by fuse F11 of B001 and is controlled by pin 5 of the connector B of the control unit.

The control unit M010 is then connected through the CAN network to the Body Computer M001 and to the other network nodes: information on the following is sent through this connection

- self-diagnosis of the system that also produces a signal for the "EOBD" warning light, located on the instrument panel E050 and that is connected to the connector R010;

- engine coolant temperature, which is sent to the instrument panel E050 which manages the gauge and the warning light;

- engine rpm, which is sent to the instrument panel E050 rev counter;

- minimum engine oil pressure, which is sent to the instrument panel E050 that controls the warning light;

- too high turbocharger pressure, sent to instrument panel E050, which controls the displaying.

It receives the speedometer signal, via the CAN, produced by the ABS control unit M050.

PETROL ENGINE ELECTRONIC MANAGEMENT - WIRING DIAGRAM

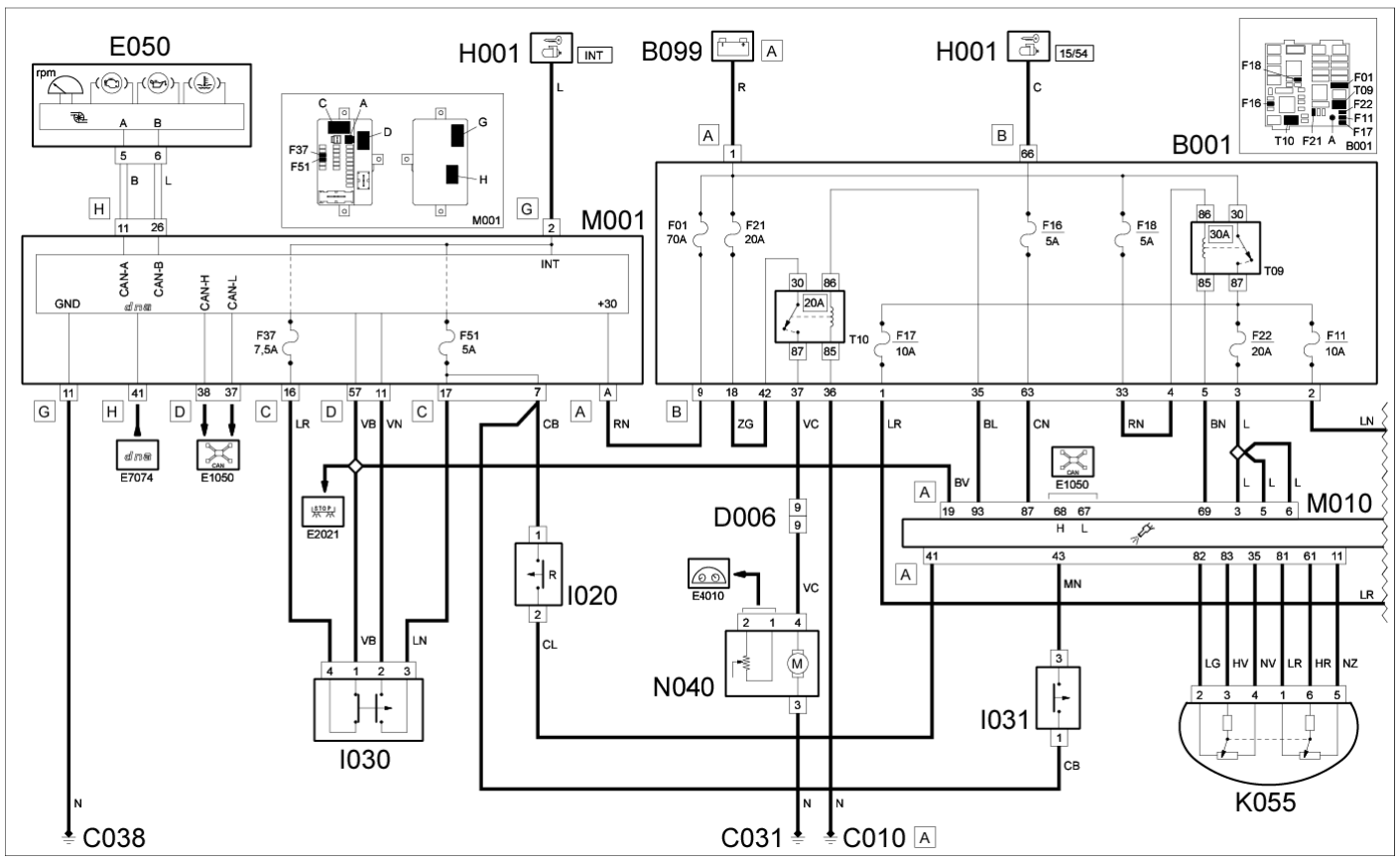

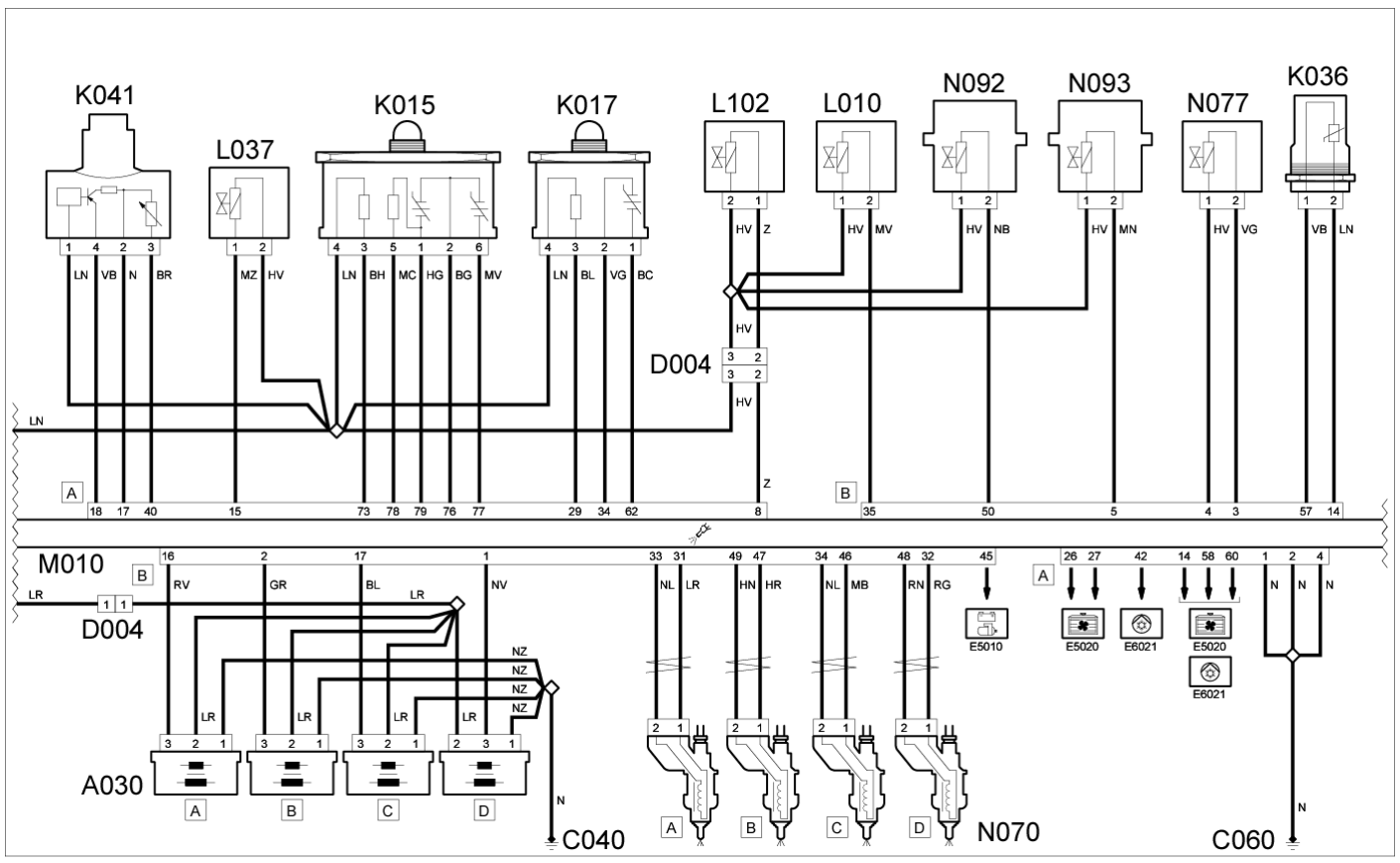

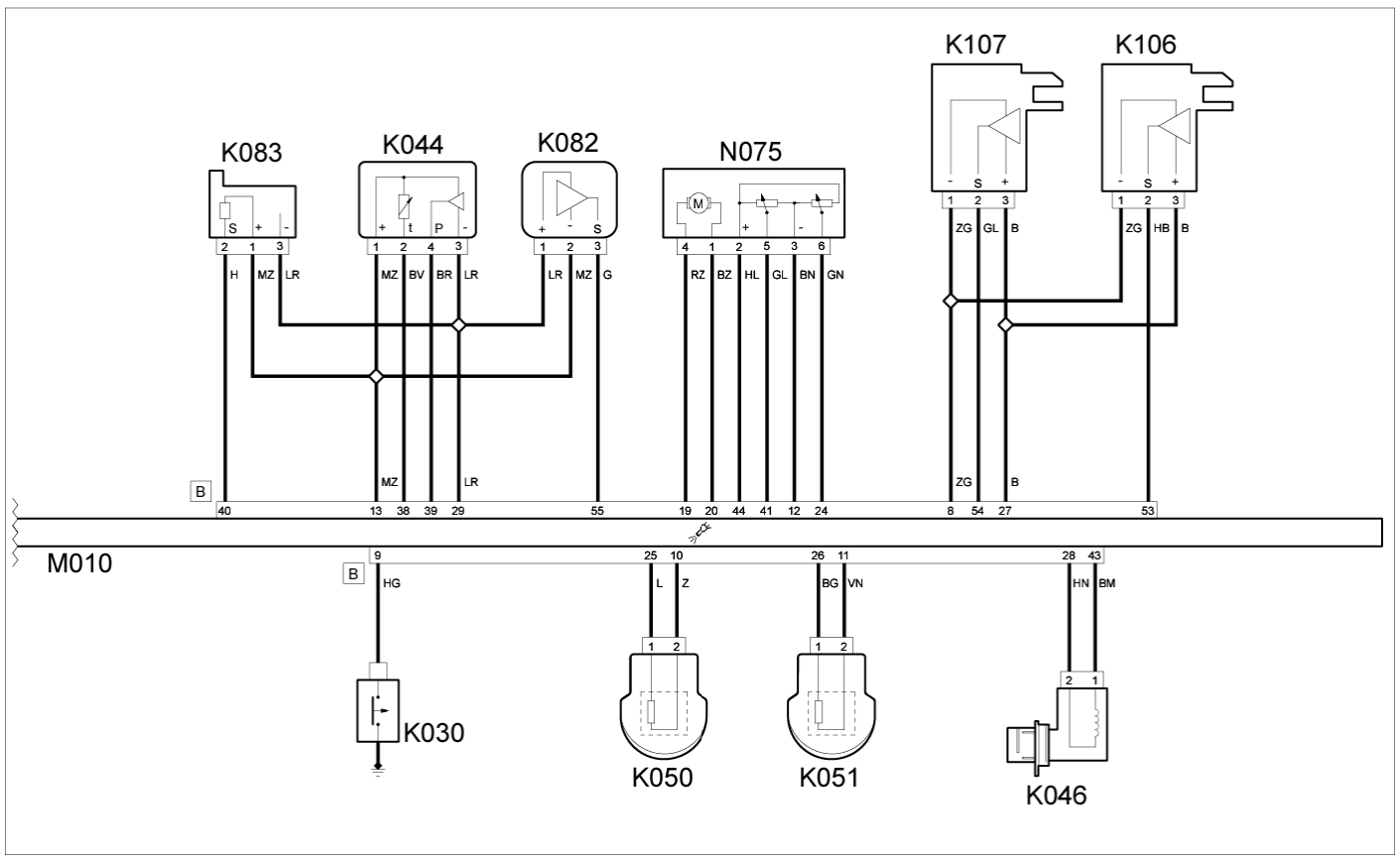

Component Code	Description	Reference to the operation
A030	IGNITION COIL	Op. 5510C14 IGNITION COIL/S - R.R.
A030	IGNITION COIL	Op. 5590B11 IGNITION COIL CONNECTOR - R.R.
B001	JUNCTION UNIT	Op. 5505A28 CONTAINER FOR ADDITIONAL JUNCTION UNIT IN ENGINE COMPARTMENT - R.R.
B099	MAXI FUSE BOX ON BATTERY	Op. 5530B40 SUPPLY BOX ON BATTERY (LINK BATTERY AND FUSE BOX) - R R
C010	LEFT FRONT EARTH	-
C031	RIGHT REAR EARTH	-
C038	EARTH ON CENTRE TUNNEL	-
C040	EARTH ON ENGINE	-
C060	INJECTION CONTROL UNIT EARTH	-
D004	FRONT/ENGINE COUPLING	
D006	FRONT/REAR COUPLING	-
E050	INSTRUMENT PANEL	Op. 5560B10 CONTROL PANEL - R+R
H001	IGNITION SWITCH	Op. 5520A18 IGNITION SWITCH CONTACT CARRIER LOCK BARREL - R.R.
I020	REVERSING LIGHTS SWITCH	Op. 5550D22 REVERSING LIGHT SWITCH - R+R
I030	BRAKE PEDAL SWITCH	Op. 5550D10 BRAKE LIGHT SWITCH - R+R
I031	CLUTCH PEDAL SWITCH	Op. 1056B78 SWITCH ON CLUTCH PEDAL - R.R (PETROL ENGINES)
K015	LAMBDA SENSOR ON PRE-CATALYZER	Op. 1080B94 FRONT LAMBDA SENSOR TO WITH CATALYTIC CONVERTER - R.R
K017	LAMBDA SENSOR ON CATALYZER	Op. 1080B95 REAR LAMBDA SENSOR TO CATALYTIC CONVERTER - R.R
K030	ENGINE OIL PRESSURE SENSOR (SWITCH)	Op. 1084A42 ENGINE OIL PRESSURE WARNING LIGHT SWITCH - R.R.
K030	ENGINE OIL PRESSURE SENSOR (SWITCH)	Op. 5590B01 OIL PRESSURE SENSOR CONNECTOR - R.R.
K036	ENGINE COOLANT TEMPERATURE SENSOR/SENDER UNIT	Op. 1056F50 COOLANT TEMPERATURE SENSOR - R.R.
K036	ENGINE COOLANT TEMPERATURE SENSOR/SENDER UNIT	Op. 5590B02 ENGINE COOLANT TEMPERATURE SENSOR/SENDER UNIT CONNECTOR - R.R.
K041	AIR FLOW METER	Op. 1056F09 HOT FILM AIR FLOW METER - R.R
K044	AIR TEMPERATURE/PRESSURE SENSOR	Op. 1056F57 INTAKE AIR PRESSURE/TEMPERATURE SENSOR - R.R.
K044	AIR TEMPERATURE/PRESSURE SENSOR	Op. 5590B03 AIR TEMPERATURE/PRESSURE SENSOR CONNECTOR - R.R.
K046	RPM SENSOR	Op. 5510C26 ENGINE RPM SENSOR - R+R
K046	RPM SENSOR	Op. 5590B04 RPM SENSOR CONNECTOR - R.R.
K050	DETONATION SENSOR	Op. 5510C48 TIMING SIDE DETONATION SENSOR - R+R
K050	DETONATION SENSOR	Op. 5590B18 KNOCK SENSOR CONNECTOR - R.R.
K051	DETONATION SENSOR - 2	Op. 5510C46 FLYWHEEL SIDE DETONATION SENSOR - R+R
K051	DETONATION SENSOR - 2	Op. 5590B31 KNOCK SENSOR 2 CONNECTOR - R.R.
K055	ACCELERATOR PEDAL POTENTIOMETER	Op. 1068A20 ACCELERATOR PEDAL WITH BUILT-IN POTENTIOMETER - R.R
K082	SUPERCHARGING SENSOR	Op. 1056F41 AIR PRESSURE SENSOR - R.R.
K082	SUPERCHARGING SENSOR	Op. 5590B06 SUPERCHARGING SENSOR CONNECTOR - R.R.
K083	FUEL PRESSURE SENSOR	Op. 1056F54 FUEL PRESSURE SENSOR - R.R.
K083	FUEL PRESSURE SENSOR	Op. 5590B33 FUEL PRESSURE SENSOR CONNECTOR - R.R.
K106	INTAKE SIDE TIMING SENSOR	Op. 1056F51 CAM ANGLE SENSOR - R.R.
K106	INTAKE SIDE TIMING SENSOR	Op. 5590B34 TIMING SENSOR CONNECTOR, INTAKE SIDE - R.R.
K107	EXHAUST SIDE TIMING SENSOR	Op. 1056F51 CAM ANGLE SENSOR - R.R.
K107	EXHAUST SIDE TIMING SENSOR	Op. 5590B35 TIMING SENSOR CONNECTOR, EXHAUST SIDE - R.R.
L010	FUEL VAPOUR RECOVERY SOLENOID VALVE	Op. 1080E28 PIPE FROM ACTIVE CHARCOAL FILTER TO SOLENOID - R.R.
L010	FUEL VAPOUR RECOVERY SOLENOID VALVE	Op. 5590B23 FUEL VAPOUR RECOVERY SOLENOID VALVE CONNECTOR - R.R.
L037	WASTE GATE SOLENOID VALVE	Op. 1064B44 WASTE GATE VALVE ACTIVATION SOLENOID VALVE - R.R.
L102	TURBOCHARGER BY-PASS SOLENOID VALVE	Op. 1048B58 TURBOCHARGER AIR BY-PASS VALVE - R.R.
L102	TURBOCHARGER BY-PASS SOLENOID VALVE	Op. 5590B26 TURBOCHARGER BY-PASS SOLENOID VALVE CONNECTOR - R.R.
M001	BODY COMPUTER	Op. 5505A35 MAIN BODY COMPUTER/JUNCTION UNIT - R.R.
M010	ENGINE MANAGEMENT CONTROL UNIT	Op. 1056F82 CONTROL UNIT (ONE) FOR INJECTION IGNITION SYSTEM - R.R.
N040	FUEL PUMP AND LEVEL GAUGE	Op. 1040A70 SUBMERGED PUMP ASSEMBLY COMPLETE WITH LEVEL GAUGE CONTROL - R + R
N070	INJECTOR	Op. 1056F70 INJECTOR (ONE) R.R. WITH FUEL MANIFOLD PIPE REMOVED INCLUDES GASKET REPLACEMENT
N070	INJECTOR	Op. 5590B09 INJECTOR CONNECTOR - R.R.

N075	INTEGRATED THROTTLE BODY ACTUATOR	Op. 1056F17 THROTTLE BODY WITH DVL - R.R.
N075	INTEGRATED THROTTLE BODY ACTUATOR	Op. 5590B10 INTEGRATED THROTTLE BODY ACTUATOR CONNECTOR - R.R.
N077	FUEL PRESSURE REGULATOR	Op. 1056F72 PRESSURE PUMP - R.R.
N077	FUEL PRESSURE REGULATOR	Op. 5590B37 FUEL PRESSURE REGULATOR CONNECTOR - R.R.
N092	PHASE SHIFTER SOLENOID VALVE ON INTAKE SIDE	Op. 1056F53 VARIABLE VALVE TIMING ELECTROMAGNETS IN INTAKE/EXHAUST TIMINIG SYSTEM - R.R.
N092	PHASE SHIFTER SOLENOID VALVE ON INTAKE SIDE	Op. 5590B38 PHASE TRANSFORMER SOLENOID VALVE CONNECTOR, INTAKE SIDE - R.R.
N093	PHASE SHIFTER SOLENOID VALVE ON EXHAUST SIDE	Op. 1056F53 VARIABLE VALVE TIMING ELECTROMAGNETS IN INTAKE/EXHAUST TIMINIG SYSTEM - R.R.
N093	PHASE SHIFTER SOLENOID VALVE ON EXHAUST SIDE	Op. 5590B39 PHASE TRANSFORMER SOLENOID VALVE CONNECTOR, EXHAUST SIDE - R.R.

ELECTRONIC MANAGEMENT OF PETROL ENGINES - COMPONENT LOCATION

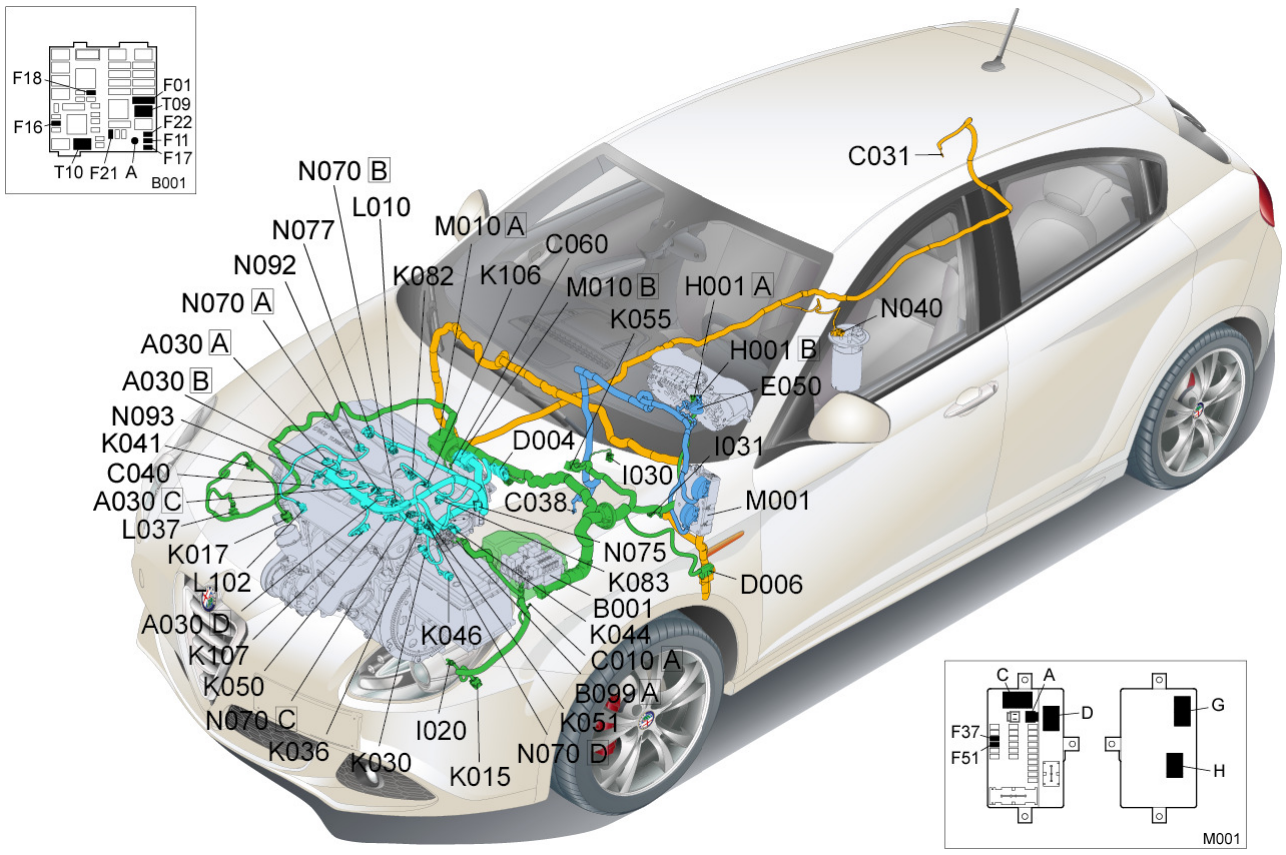

Component Code	Description	Reference to the operation
A030	IGNITION COIL	Op. 5510C14 IGNITION COIL/S - R.R.
A030	IGNITION COIL	Op. 5590B11 IGNITION COIL CONNECTOR - R.R.
B001	JUNCTION UNIT	Op. 5505A28 CONTAINER FOR ADDITIONAL JUNCTION UNIT IN ENGINE COMPARTMENT - R.R.
B099	MAXI FUSE BOX ON BATTERY	Op. 5530B40 SUPPLY BOX ON BATTERY (LINK BATTERY AND FUSE BOX) - R R
C010	LEFT FRONT EARTH	-
C031	RIGHT REAR EARTH	-
C038	EARTH ON CENTRE TUNNEL	-
C040	EARTH ON ENGINE	-
C060	INJECTION CONTROL UNIT EARTH	-
D004	FRONT/ENGINE COUPLING	
D006	FRONT/REAR COUPLING	-
E050	INSTRUMENT PANEL	Op. 5560B10 CONTROL PANEL - R+R
H001	IGNITION SWITCH	Op. 5520A18 IGNITION SWITCH CONTACT CARRIER LOCK BARREL - R.R.
I020	REVERSING LIGHTS SWITCH	Op. 5550D22 REVERSING LIGHT SWITCH - R+R
I030	BRAKE PEDAL SWITCH	Op. 5550D10 BRAKE LIGHT SWITCH - R+R
I031	CLUTCH PEDAL SWITCH	Op. 1056B78 SWITCH ON CLUTCH PEDAL - R.R (PETROL ENGINES)
K015	LAMBDA SENSOR ON PRE-CATALYZER	Op. 1080B94 FRONT LAMBDA SENSOR TO WITH CATALYTIC CONVERTER - R.R
K017	LAMBDA SENSOR ON CATALYZER	Op. 1080B95 REAR LAMBDA SENSOR TO CATALYTIC CONVERTER - R.R
K030	ENGINE OIL PRESSURE SENSOR (SWITCH)	Op. 1084A42 ENGINE OIL PRESSURE WARNING LIGHT SWITCH - R.R.
K030	ENGINE OIL PRESSURE SENSOR (SWITCH)	Op. 5590B01 OIL PRESSURE SENSOR CONNECTOR - R.R.
K036	ENGINE COOLANT TEMPERATURE SENSOR/SENDER UNIT	Op. 1056F50 COOLANT TEMPERATURE SENSOR - R.R.
K036	ENGINE COOLANT TEMPERATURE SENSOR/SENDER UNIT	Op. 5590B02 ENGINE COOLANT TEMPERATURE SENSOR/SENDER UNIT CONNECTOR - R.R.
K041	AIR FLOW METER	Op. 1056F09 HOT FILM AIR FLOW METER - R.R
K044	AIR TEMPERATURE/PRESSURE SENSOR	Op. 1056F57 INTAKE AIR PRESSURE/TEMPERATURE SENSOR - R.R.
K044	AIR TEMPERATURE/PRESSURE SENSOR	Op. 5590B03 AIR TEMPERATURE/PRESSURE SENSOR CONNECTOR - R.R.
K046	RPM SENSOR	Op. 5510C26 ENGINE RPM SENSOR - R+R
K046	RPM SENSOR	Op. 5590B04 RPM SENSOR CONNECTOR - R.R.
K050	DETONATION SENSOR	Op. 5510C48 TIMING SIDE DETONATION SENSOR - R+R
K050	DETONATION SENSOR	Op. 5590B18 KNOCK SENSOR CONNECTOR - R.R.
K051	DETONATION SENSOR - 2	Op. 5510C46 FLYWHEEL SIDE DETONATION SENSOR - R+R
K051	DETONATION SENSOR - 2	Op. 5590B31 KNOCK SENSOR 2 CONNECTOR - R.R.
K055	ACCELERATOR PEDAL POTENTIOMETER	Op. 1068A20 ACCELERATOR PEDAL WITH BUILT-IN POTENTIOMETER - R.R
K082	SUPERCHARGING SENSOR	Op. 1056F41 AIR PRESSURE SENSOR - R.R.
K082	SUPERCHARGING SENSOR	Op. 5590B06 SUPERCHARGING SENSOR CONNECTOR - R.R.
K083	FUEL PRESSURE SENSOR	Op. 1056F54 FUEL PRESSURE SENSOR - R.R.
K083	FUEL PRESSURE SENSOR	Op. 5590B33 FUEL PRESSURE SENSOR CONNECTOR - R.R.
K106	INTAKE SIDE TIMING SENSOR	Op. 1056F51 CAM ANGLE SENSOR - R.R.
K106	INTAKE SIDE TIMING SENSOR	Op. 5590B34 TIMING SENSOR CONNECTOR, INTAKE SIDE - R.R.
K107	EXHAUST SIDE TIMING SENSOR	Op. 1056F51 CAM ANGLE SENSOR - R.R.
K107	EXHAUST SIDE TIMING SENSOR	Op. 5590B35 TIMING SENSOR CONNECTOR, EXHAUST SIDE - R.R.
L010	FUEL VAPOUR RECOVERY SOLENOID VALVE	Op. 1080E28 PIPE FROM ACTIVE CHARCOAL FILTER TO SOLENOID - R.R.
L010	FUEL VAPOUR RECOVERY SOLENOID VALVE	Op. 5590B23 FUEL VAPOUR RECOVERY SOLENOID VALVE CONNECTOR - R.R.
L037	WASTE GATE SOLENOID VALVE	Op. 1064B44 WASTE GATE VALVE ACTIVATION SOLENOID VALVE - R.R.
L102	TURBOCHARGER BY-PASS SOLENOID VALVE	Op. 1048B58 TURBOCHARGER AIR BY-PASS VALVE - R.R.
L102	TURBOCHARGER BY-PASS SOLENOID VALVE	Op. 5590B26 TURBOCHARGER BY-PASS SOLENOID VALVE CONNECTOR - R.R.
M001	BODY COMPUTER	Op. 5505A35 MAIN BODY COMPUTER/JUNCTION UNIT - R.R.
M010	ENGINE MANAGEMENT CONTROL UNIT	Op. 1056F82 CONTROL UNIT (ONE) FOR INJECTION IGNITION SYSTEM - R.R.
N040	FUEL PUMP AND LEVEL GAUGE	Op. 1040A70 SUBMERGED PUMP ASSEMBLY COMPLETE WITH LEVEL GAUGE CONTROL - R + R

N070	INJECTOR	Op. 1056F70 INJECTOR (ONE) R.R. WITH FUEL MANIFOLD PIPE REMOVED INCLUDES GASKET REPLACEMENT
N070	INJECTOR	Op. 5590B09 INJECTOR CONNECTOR - R.R.
N075	INTEGRATED THROTTLE BODY ACTUATOR	Op. 1056F17 THROTTLE BODY WITH DVL - R.R.
N075	INTEGRATED THROTTLE BODY ACTUATOR	Op. 5590B10 INTEGRATED THROTTLE BODY ACTUATOR CONNECTOR - R.R.
N077	FUEL PRESSURE REGULATOR	Op. 1056F72 PRESSURE PUMP - R.R.
N077	FUEL PRESSURE REGULATOR	Op. 5590B37 FUEL PRESSURE REGULATOR CONNECTOR - R.R.
N092	PHASE SHIFTER SOLENOID VALVE ON INTAKE SIDE	Op. 1056F53 VARIABLE VALVE TIMING ELECTROMAGNETS IN INTAKE/EXHAUST TIMINIG SYSTEM - R.R.
N092	PHASE SHIFTER SOLENOID VALVE ON INTAKE SIDE	Op. 5590B38 PHASE TRANSFORMER SOLENOID VALVE CONNECTOR, INTAKE SIDE - R.R.
N093	PHASE SHIFTER SOLENOID VALVE ON EXHAUST SIDE	Op. 1056F53 VARIABLE VALVE TIMING ELECTROMAGNETS IN INTAKE/EXHAUST TIMINIG SYSTEM - R.R.
N093	PHASE SHIFTER SOLENOID VALVE ON EXHAUST SIDE	Op. 5590B39 PHASE TRANSFORMER SOLENOID VALVE CONNECTOR, EXHAUST SIDE - R.R.